PERFORMANCE COMPARISON OF A LAB – VRB – PEMFC FOR A WIND STAND ALONE SYSTEM

Luminița BAROTE, Ioan SERBAN

Transilvania University of Braşov, E-mail:barote@leda.unitbv.ro

***Abstract* – This paper deals with a wind based stand-alone generating unit with permanent magnet synchronous generator (PMSG) that contains energy storage devices. It focuses mainly on comparing the performances of the Lead Acid Batteries (LAB), Hydrogen-air Proton Exchange Membrane Fuel Cells (PEMFCs) and a Vanadium Redox Flow Battery (VRB) as storage devices, when wind speed has a significant variation, in dynamic operating conditions.**
The studied system is equipped with PMSG, a buck-boost converter, a three-phase rectifier bridge, a voltage regulator, an inverter, transformer, AC load, and storage element (the three type of storage device above mentioned) to store a surplus of wind energy and to supply power during a wind power shortage. In order to achieve a high efficiency of the wind turbine, a maximum power control is used.

***Keywords*:** *wind turbine, PMSG, storage, lead acid battery, PEM fuel cell, VRB.*

1. INTRODUCTION

Variable speed wind energy systems integrated with power electronic interfaces are becoming popular because they can extract optimum power, mitigate the electrical power output and supply reactive power on demand. The permanent magnet synchronous generator (PMSG) is widely used in many applications as high-performance variable-speed drives, because of improved efficiency, modularity and absence of excitation current. A maximum power point tracker is used to maximize the turbine output power and adjust generator speed.
The PMSG is controlled by a maximum-efficiency control in order to maximize electric power output [5], [6]. Depending on the wind speed, the regulator adjusts the power transferred bringing the turbine operating points on the "maximum power curve" like in Figure 1.
For stand-alone systems, the storage devices are essential to store electricity for use when the wind is absent. The basic building block of the battery module is the electrochemical cell, as shown in Figure 2. Lead-acid batteries consist of 2V (at open circuit) cells which are connected in series and parallel arrays as needed to match the desired electrical characteristics of the application. Extremely high discharges (10^2-10^3 Amperes) are possible, and batteries can be switched very rapidly between open circuit, charge, or discharge.

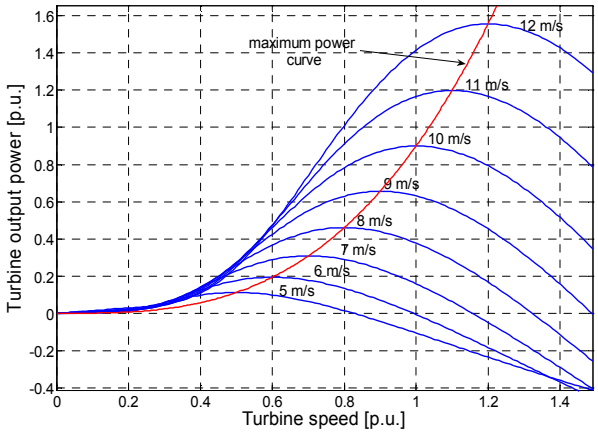

Figure 1: Wind turbine power characteristics

A classical battery can be modeled as an ideal voltage source with an open voltage circuit, a constant representing its internal resistance and the voltage at the battery leads [7]. This voltage can be determined by measuring it at no load, while the internal resistance can be deduced by connecting a load and measuring both the voltage and current at full load.

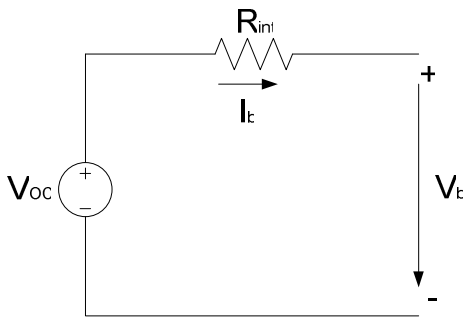

Figure 2: Equivalent electric circuit model of the battery

In recent years, the growing cost of conventional fuel and the increasing restrictions imposed by pollution laws have made efficient energy conversion systems based on fuel cell technology and VRB, more attractive than they were in the past.
Fuel cells are becoming a more attractive option for many remote power applications. One of the main well-known problems of a fuel cell system is its slow

dynamic response: the fuel cell system needs significant time to reach a new steady-state condition after a load change, [3]. A fuel cell stack is a device that converts the chemical energy of hydrogen into electricity as long as fuel (hydrogen) and oxidant (air) are supplied. In order to operate the fuel cell stack in an economical way for different power demands, fuel and oxidant flow may be dynamically adjusted as a function of load demand. The hydrogen fuel may be taken from a storage tank or generated using a reformer [9].
The overall redox reaction is:

$$2H_2 + O_2 \rightarrow 2H_2O + heat + electricity \qquad (1)$$

The polymer used in a PEMFC is often made from Nafion (117), which allows protons to travel through, but prohibits electrons to pass.
An equivalent electric circuit model representing the static and dynamic behavior of the fuel cell is shown in Figure 3, [9].

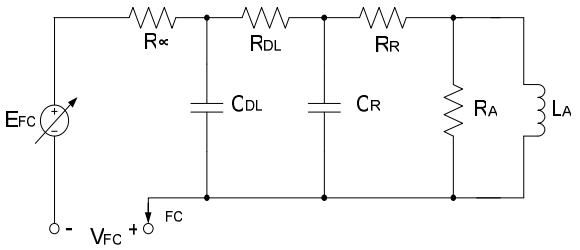

Figure 3: Equivalent electric circuit model of the PEMFC

The DC voltage source E_{FC} models the open circuit voltage, resistance of the bulk-material R_∞ can be assumed to be constant. However, the double layer resistances R_{DL} and R_R are certainly not constant. The best numerical fit for these resistances is found by using:

$$R_{DL} = R_{DL,\infty} + R_{DL,0} \cdot e^{-\alpha_{DL} \cdot I^2_{FC}} \qquad (2)$$

$$R_R = R_{R,\infty} + R_{R,0} \cdot e^{-\alpha_R \cdot I^2_{FC}} \qquad (3)$$

The model values considered in the paper of the additional variables are $R_{DL,\infty} = 75.22 m\Omega$, $R_{DL,0} = 171.1 m\Omega$, $\alpha_{DL} = 0.3418$, $R_{R,\infty} = 18.44 m\Omega$, $R_{R,0} = 96.66 m\Omega$ and $\alpha_R = 0.2444$. The resistances are dependent on the square of the fuel cell output current. The absorption resistance R_A is fitted with a first order polynomial equation:

$$R_A = R_{A,0} - \alpha_A \cdot I_{FC} \qquad (4)$$

Where $R_{A,0} = 23.52 m\Omega$ and $\alpha_A = 2.624 \cdot 10^{-3}$.

The two double layer capacitors present, $C_{DL,}$ and C_R and an adsorption inductor L_A assure the dynamic response of the fuel cell. The capacitors values are fitted with a non-linear least squares method and the results are presented in Table 1.

R_∞ (Ω)	0.282
C_{DL} (F)	0.220
R_{DL} ($m\Omega$)	200
C_R (F)	0.441
R_R ($m\Omega$)	94.4
L_A (mH)	36.1
R_A ($m\Omega$)	19.1

Table1: Fitted results of the impedance spectroscopy to a equivalent circuit model of a PEMFC [9]

A vanadium fuel cell is an electrochemical cell divided into two compartments by an ionic membrane with acid vanadium sulfate electrolytes in each compartment. The electrolytes are pumped through the compartments from two separate electrolyte tanks. The oxidation states of the vanadium are V^{2+} to V^{3+} in the negative electrolyte and V^{5+} to V^{4+} in the positive electrolyte. When the electrodes of the cell are connected to an external load the differing oxidation states of the vanadium cause an electrical current to flow in the circuit (see Figure 4). The electrodes, which are made of carbon, do not participate in the chemical reactions.

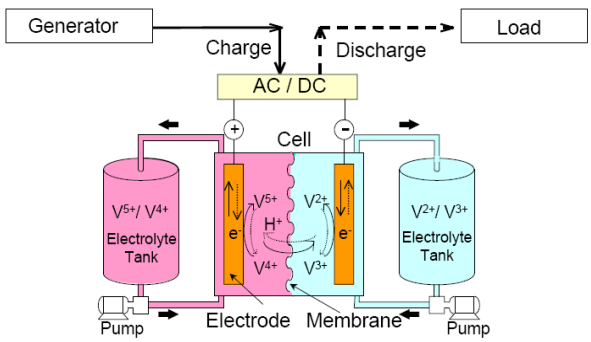

Figure 4: A vanadium redox flow battery

In the fully charged state (V^{2+} in the negative electrolyte and V^{5+} in the positive electrolyte) the potential across the cell is 1.6 V. In the discharged state (V^{3+} and V^{4+}) the potential is 1.1 V. By connecting stacks of cells electrically in series any larger voltage can be obtained [10].
The electrochemical processes for the VRB are:

$$\begin{aligned} V^{4+} &\rightarrow V^{5+} + e^- \quad (+) \\ V^{3+} + e^- &\rightarrow V^{2+} \quad (-) \end{aligned} \qquad (5)$$

Running current into the cell stack reverses the process and recharges the electrolyte solution, which can be reused to release energy at any time. Charging

the battery or storing energy is possible from a number of different sources such as wind, solar, hydro, excess power generation or mains electricity.
As wind speed is variable by nature, storage devices are employed to cope with wind absence, supplying the consumers during these periods. A classical storage configuration employs LAB, but in recent years, fuel cells and the last research in this area is a vanadium redox battery become more and more attractive.
This paper aims to make a comparison between LAB, PEM FC and VRB with emphasis on the last one.

2. PERFORMANCE COMPARISON OF THE ELECTRICAL ENERGY STORAGE DEVICES

In renewable energy applications, the storage devices it's a very important to use. The LAB is the dominant energy storage technology for industrial stationary applications, but in the recent years, of great interest are tuned of the electrical storage devices (fuel cells and VRB) witch have improved a better storage capacity, a low environmental impact and more advantages.
The most important characteristics of the comparison between a LAB and VRB are presented in the following table:

	LAB	VRB
Energy Density [Wh/litre]		
Theoretical	70	30-47
Practical	12-18	15-25
Power Density [W/kg]	370	166
Temperature Range	-5 to 40^{0}C	0 to 40 ^{0}C
Efficiency	45%	65-75%
Charge to Discharge ratio	5 to 1	1.8 to 1
Depth of Discharge (DOD)	25 to 30%	75%
Life Cycle	1500	10000+
Maintenance Cost [$/kWh]	$0.02	$0.008
Disposal Costs	Yes	No
Cost [$/kWh]*	$500 - $1550	$300 - $650

* The metric $/kWh is used to compare durations of longer than an hour. This factors in Life and allows for energy storage and UPS applications. The ranges are determined by size of storage required.

Table 2: Comparison between LAB and VRB [11]

A fuel cell is not an energy storage device. The VRB uses a fuel cell of different design compared to classic fuel cell technology and is often referred to as a re-generative fuel cell. The key differences in the design is that a liquid electrolyte is used (no gasses) and there is no catalyst required in the VRB. A fuel cell is an energy conversion device which electrochemically converts the energy in hydrogen-rich fuels directly into electricity. The fuel cell needs the hydrogen-rich fuel to be continually fed to it. Fuels cells and the VRB have different applications. The fuel cell gives much better energy and power performance (this is due to the nature of the fuel) than any secondary battery. The fuel cell is targeted for electrical vehicles and stationery backup applications. However, fuel cells require an expensive element called a catalyst, which is critical in aiding in the direct conversion of different forms of hydrogen into electricity. Fuel cells operate at high temperatures, which require a high degree of advanced technology for system operation and management. Of these causes, is preferable to use the VRB for storage energy in wind energy stationary applications, because gives more advantages and the investment cost is damped in a short time.
Is necessary to mentioned as VRB are the same dynamic behavior to a LAB, but in terms of a performance operating, the VRB are recommended (in wind and solar applications) because improved the following advantages (see Table 2).
Environmentally, the VRB is characterized by having the lowest ecological impact of all energy storage technologies and is unlike most other conventional energy storage systems that rely on substances such as lead or cadmium. Unlike lead acid systems the VRB electrolyte has an indefinite life span and is reusable.
A life-cycle assessment approach of the environmental impact of both VRB and lead-acid batteries for use in stationary applications, indicates that the Vanadium Redox Battery contributes between 7-25% of emissions of key environmental impact components (CO2, SO2, CO, CH4, NOx) during its life cycle, when compared with lead-acid batteries [11].

3. SISTEM CONFIGURATION

The studied configuration is depicted in Figure 5 and is composed from PMSG, rectifier bridge, buck-boost converter, voltage regulator, dump load, battery bank, inverter, transformer and loads.
It supplies single-phase consumers, at 230 V and 50 Hz. The buck-boost regulator controls the electro-magnetic torque by means of wind speed, in order to extract optimum from available power. The battery bank, charged by the rectifier bridge, ensures an un-interrupted feeding of loads, no matters the wind speed.

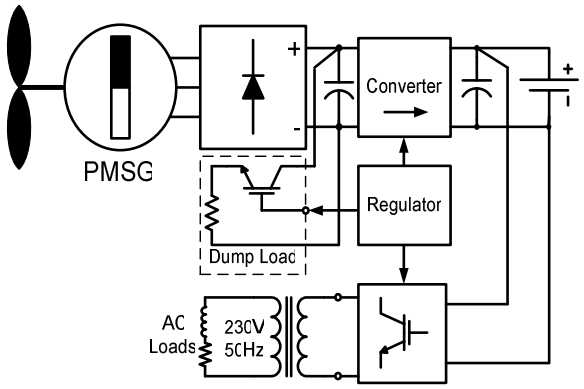

Figure 5: System configuration

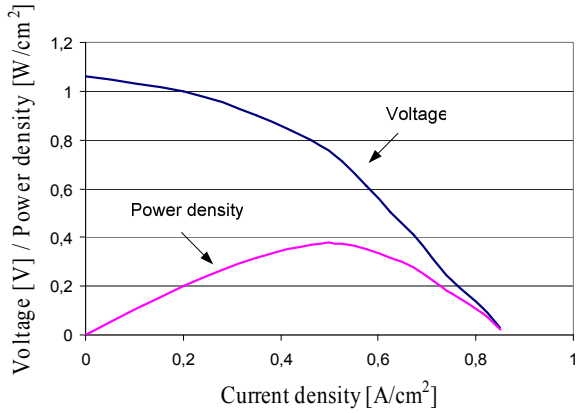

Figure 6: The V_P = f (J) fuel cell characteristics

The dump load – actually the electronic load controller- works when the power demanded by loads is small and the one delivered by the turbine high. A drawback of such a configuration is the presence of the rectifier bridge, which introduces current harmonics through the generator, [5].

In the Figure 6, $V = f(J)$ (voltage versus current density) static characteristics for fuel cells are presented for 70°C temperature and 3 atmosphere pressure, [8]. The power density (see Figure 6) demonstrates that the phenomenological durability model can successfully generate the polarization curves for aged membrane-electrode assembly (MEA) at different time periods, [4].

The calculated polarization curves shifted downward and the current density at which the power curves reached their peak values.

The fuel cell operation at a maximum power output values at a 0.3W/cm^2.

4. SIMULATION RESULTS

The proposed system has been modeled and simulated using the Matlab/Simulink environment. Figure 7 shows the block diagram. The configuration includes the PMSG, a three-phase rectifier bridge, a buck-boost converter, the storage elements (LAB, VRB and PEMFC), the voltage regulator and a block that models the wind turbine. Measurement blocks are also included. The main library used for system modeling was SimPowerSystem. The buck-boost converter and its regulator will work as a maximum power point tracker for the wind turbine.

The input voltage varies with the wind speed, while the output voltage is kept constant by the storage devices.

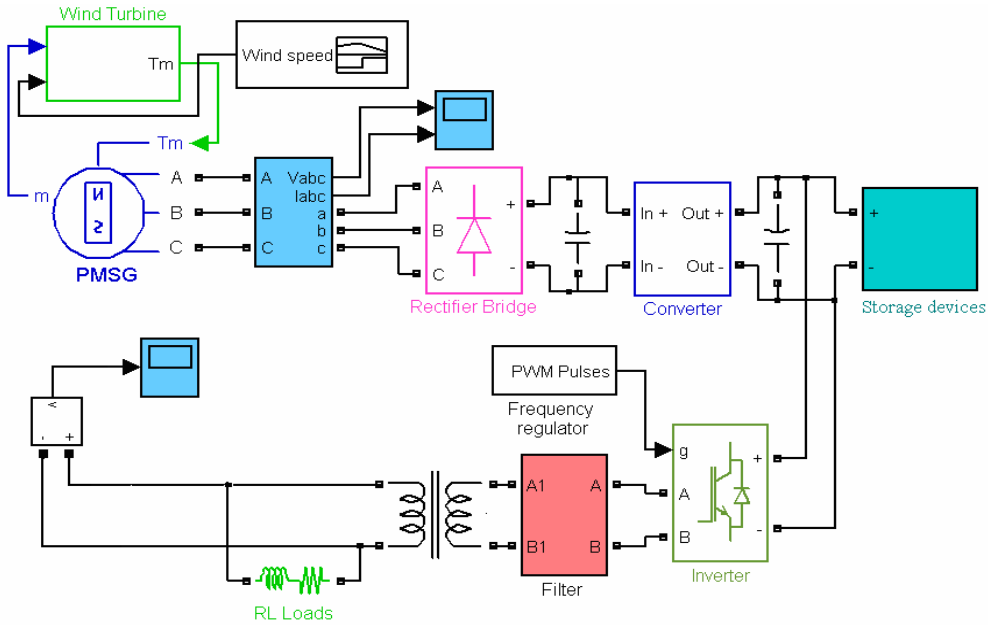

Figure 7: Simulink block diagram

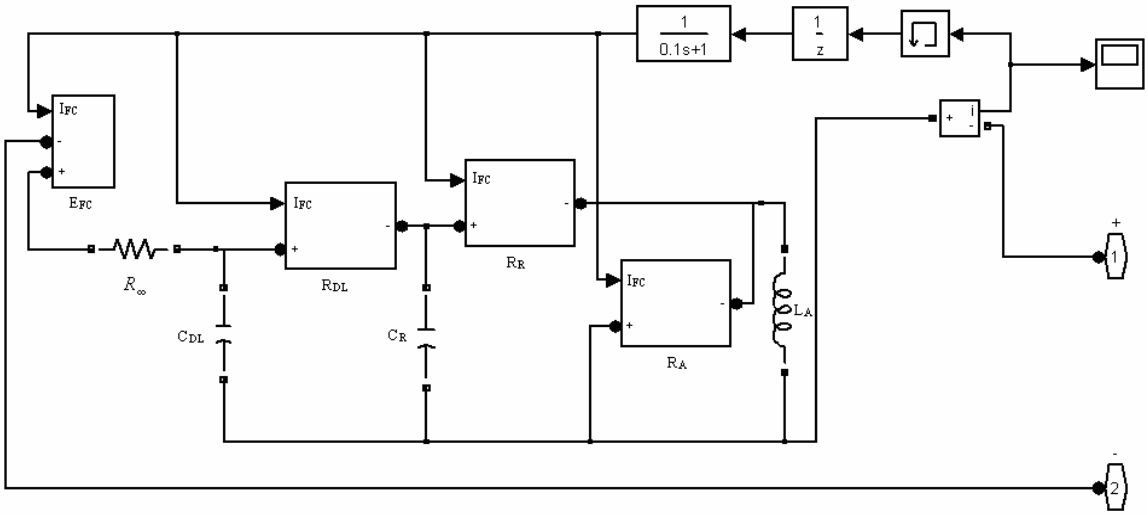

Figure 8: Simulation scheme in Simulink for a PEMFC studied

The storage's charging current is given by the difference between the buck-boost's and inverter's currents. Also, the storage devices charging state is controlled by the buck-boost converter, therefore no additional charging converter is required - which would increase the system's cost.

Figure 8 shows the block diagram in Simulink for a PEMFC studied.

In order to establish the reliability of such a system, simulations were carried out following several situations:

- the PMSG's behavior assuming a variable wind speed;
- the system's dynamic behavior under variable load conditions;

4.1 Dynamic performance during wind speed variation

The studied regime assumes that the wind speed decreases from 10 m/s to 7 m/s, beginning with t = 1 s. During this period, the system works in steady state regime – the total load is constant. For this regime, two storage devices are employed; LAB (see Figure 2) and PEMFC respectively (see Figure 3 and detailed in Figure 8). During this process, the average LAB - VRB current falls from 5A to about –4.5A and the average PEMFC current decreases from 6.5A to about -2A, as shown in Figure 9. In order to ensure a permanent supply for the loads, the storage devices will pass from charging to discharging mode.

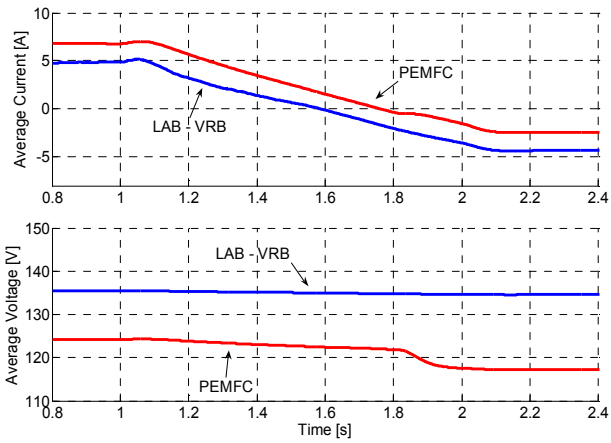

Figure 9: Average current and voltage comparison between LAB - VRB and PEMFC

4.2 Transient behavior under variable load

For the following simulation, the wind velocity is assumed constant at 10 m/s. The initial load's values are P=500W and Q=100var and the generator is operating in steady – state conditions. At t=2s an initial load is suddenly connected and disconnected at t=3s. Because the mechanical power delivered to the PMSG is constant, the power balance is maintained by varying the storage device's charging current, as shown in Figure 10.

It can be seen that the average voltage of the LAB-VRB remain constant, to about 135V, while the PEMFC voltage presents a significant drop of about 7V.

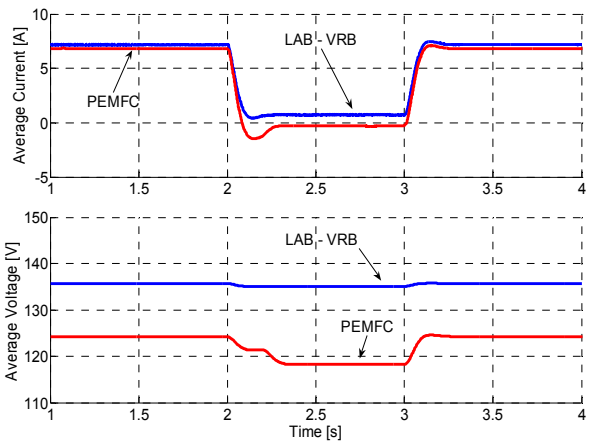

Figure 10: Average current and voltage comparison between LAB - VRB and PEMFC

5. CONCLUSIONS

For small power autonomous wind systems, the configuration with PMSG, storage devices and single-phase loads appears suitable.

The LAB is dominant energy storage technology for wind stationary applications, but in the recent years the VRB research, demonstrate to be better in remote areas. Applying the VRB electrical energy storage in conjunction with a wind generator removes the fluctuations of power generation. The VRB storage system is characterized by having a high efficiency, high energy capacity and lowest ecological impact of all energy storage technologies.

The PEMFC can also be used as storage element, only it has a lower dynamic behavior than the VRB, as was shown in the simulation results section (Figure 10).

In conclusion, the VRB can replace the classical LAB as storage devices in small power wind systems.

The load variations are well managed and the dynamic performances are good. As results, the system's stability can be easily ensured by using the proposed control.

References

[1] K. J. Runtz, M. D. Lyster: *Fuel Cell Equivalent Circuit Models for Passive Mode Testing and Dynamic Mode Design*, 2005 IEEE, CCECE/CCGEI, Saskatoon, May 2005, pp.794-797.

[2] R. A. Costa, J. R. Camacho: *The dynamic and steady state behavior of a PEM fuel cell as an electric energy source*, Science Direct, Journal of Power Sources 161 (2006), pp. 1176-1182.

[3] D. Franzoni, E. Santi, A. Monti, F. Ponci, D. Patterson, N. Barry: *An Active for Fuel Cell Applications*, 2005 IEEE, pp. 1607-1613.

[4] D. Liu, S. Case, *Durability study of proton exchange membrane fuel cells under dynamic testing conditions with cyclic current profile*, Science Direct, Journal of Power Sources 162 (2006) pp. 521-531.

[5] L. Barote, C. Marinescu: *Control of Variable Speed PMSG Wind Stand-Alone System*, OPTIM'06, Braşov, Romania, 18-19 May, 2006, vol. II, pp. 243-248.

[6] T. Nakamura, Sh. Morimoto, M. Sanada, Y. Takeda, *Optimum Control of IPMSG for Wind Generation System*, IEEE Power Conversion Conference, 2002, pp 1435-1440.

[7] N. Hatziargyriou, M. Donnelly, *Modelling new forms of generation and storage*, Cigre Technical Brochure, Nov. 2000.

[8] R. Tirnovan, A. Miraoui, R. Munteanu, I. Vadan., H. Balan, *Polymer Electrolyte Fuel Cell System (PEFC)* IEEE International Conference on Automation, Quality and Testing, Robotics, May 2006, pp. 457 – 462.

[9] P.J.H Wingelaar, J.L. Duarte, M.A. M. Hendrix, *Dynamic and static simulation tool for PEM fuel cells*, IEEE ISIE 2006, July 9-12, Montreal, Quebec, Canada, pp.1700-1705.

[10] Cellennium (Thailand) Company Limited – Technology - *Basic Principle of the Vanadium Fuel Cell* - http://www.vanadiumbattery.com;

[11] VRB Power Systems - *An Electrochemical Energy Storage Company*, Executive Summary, 7 March, 2007, website: www.vrbpower.com;

[12] The VRB Energy Storage System (VRB-ESS) – *The Multiple Benefits of Integrating the VRB-ESS with Wind Energy*- Case study, 2 March, 2007, website: www.vrbpower.com;

[13] Mark T. Kuntz, *Electricity Storage for Power and Energy Management*, VRB Power System Inc., Energy Storage & Power Quality Solutions, August 16, 2005.