THE INFLUENCE OF SWITCHING CURRENT TRANSIENTS IN SMALL POWER INVERTER FED INDUCTION MOTORS

Nicuşor TOTOR

Alcatel-Lucent University Timişoara, Romania

nicusor.totor@alcatel-lucent.ro

***Abstract* – This study provides the analysis of the behavior of current source inverters fed IM regarding the effect of switching phenomena .**

Keywords*: *current source inverter(CSI),alternating current , spiral vectors ,induction motor model (IMM).

1. INTRODUCTION

It is known that static converters are supplying the induction motors with no sinusoidal voltages and currents causing a qualitatively different behavior of the considered electric machine . In this paper the analysis will be done by the use of spiral vectors theory given in [1] . Then the analytical expressions for currents and internal torque are written to obtain simulation of IMM .

2. THE MODEL OF CSI FED IM .

In fig. 1 it is represented the system of induction motor fed by a current source inverter .

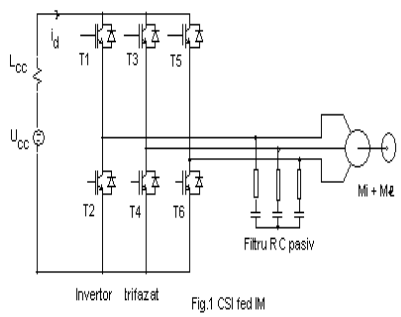

Fig.1 CSI fed IM

Typical for this system is the ramp variation of currents during the commutation period of the bipolar transistors because of the inductor L_{cc} placed in the direct current circuit of the inverter .The variables that are used to define the mathematical model are : primary and secondary currents , primary and secondary magnetic fluxes and the electric torque. The electric equations written for the energetically equivalent machine with squirrel cage rotor are :

$$\begin{cases} \underline{u_s} = R_s \underline{i_s} + \dfrac{d\underline{\Phi_s}}{dt} \\ 0 = R_r^{|} \underline{i_r^{|}} + \dfrac{d\underline{\phi_r^{|}}}{dt} - j\omega\, \underline{\phi_r^{|}} \\ \underline{\phi_s} = L_s \underline{i_s} + L_m \underline{i_r^{|}} \\ \underline{\phi_r^{|}} = L_r^{|} \underline{i_r^{|}} + L_m \underline{i_s} \\ M = \dfrac{3}{2} p \operatorname{Re}\left[\underline{\phi_s} \underline{i_s^*}\right] \\ M - M_{rez} = \dfrac{J}{p}\dfrac{d\omega}{dt} \end{cases} \quad . \qquad (1)$$

with the usual notation of the variables[2] . Note that the structure of equation is the same as for space vectors because both approaches are based on the asymmetrical T equivalent electrical circuit [3] . The difference is in the definition of spiral vectors because they consider also the instantaneous phase of the variable witch derivative represents the frequency

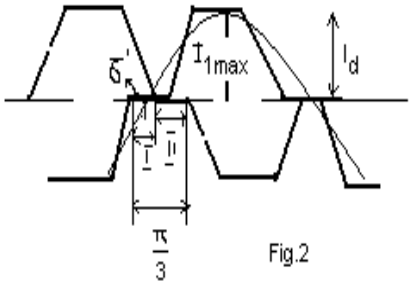

Fig.2

$$2\pi \frac{d\tau}{dt} = \omega \quad . \qquad (2)$$

In fig. 2 it is represented a symmetrical three-phase ramp currents system . The time between two commutations are decomposed in two sub periods . In the first subperiod the primary current is variable in ramp and in the next second subperiod is constant and equal with the DC bus current of the inverter . For t ∈ (0 , τ′) the primary current is (see fig.2) :

$$\underline{i}_{sI} = \underline{a}' + \underline{b}'\tau \quad , \qquad (3)$$

and for t∈(π/3- τ ′,π/3)

$$\underline{i}_{sII} = \underline{a}' + \underline{b}'\tau' = \underline{i}_{sI}(0)\, e^{j\frac{2\pi}{3}} \quad , \qquad (4)$$

$$\underline{i}_{sII} = \frac{2}{\sqrt{3}} j i_d \, , \qquad (5)$$

During the second subperiod the current is constant and we can write :

$$\underline{i}_{sI}(\tau') = \underline{i}_{sII} = \text{Ct.} \qquad (6)$$

The constants a' and b' are determined by :

$$\begin{cases} a' = \underline{i}_{sII} e^{-j\frac{\pi}{3}} \\ b' = \dfrac{1}{\tau'} \underline{i}_{sII} e^{j\frac{\pi}{3}} \end{cases} , \qquad (7)$$

For currents in sub periods **I** and **II** a relation of dependency is obtained :

$$\underline{i}_{sI} = \underline{i}_{sII} e^{j\frac{\pi}{3}} \left(1 - \frac{\tau}{\tau'} e^{j\frac{\pi}{3}} \right) . \qquad (8)$$

The hunting transients for primary flux can be written as [4]:

$$\underline{\phi}_s = L_s \frac{(1+pL_s'/R)}{1+pT_r} \underline{i}_s + \frac{p}{1+p(\tau'+\tau)} \underline{\phi}_s(0) \qquad (9)$$

with $\underline{\phi}_s(0)$ the initial value at switching start (t = 0) and L_s' is the primary transitory inductance of IM . By substitution of $\underline{i}_{sI}$ and $\underline{i}_{sII}$ we obtain :

$$\underline{\phi}_{sI}(\tau) = L_m \left[(1 - e^{-\frac{\tau}{\omega T_r}})(\underline{a}' - \underline{b}') + \underline{b}'\tau \right] + \underline{\phi}_s(0) e^{-\frac{\tau}{\omega T_r}} \qquad (10)$$

$$\underline{\phi}_{sII}(\tau) = L_m \underline{i}_{sII} (1 - e^{-\frac{\tau}{\omega_1 T_r}}) + \underline{\phi}_{sII}(0) e^{-\frac{\tau}{\omega_1 T_r}} \qquad (11)$$

with $\underline{\phi}_{sII}(0)$ given by (10) for τ=τ′ . Finally the analytic expression of primary flux for switching period will have the following form :

$$\underline{\phi}_{sI}(\tau)=\frac{L_m \underline{i}_{sII}}{\tau'}\left(\tau+\frac{1+e^{\frac{1}{\omega T_r}(\frac{\pi}{3}-\tau')}}{1+e^{\frac{1}{\omega T_r}\frac{\pi}{3}}}e^{\frac{1}{\omega T_r}\tau}+\tau'-1\right). \quad (12)$$

3. COMPARISON WITH SIX-STEP CSI

For analysis purpose it is compulsory to compare the torque pulsations caused by primary currents and fluxes with those caused by considering square wave variations of currents (i.e. six step operation of CSI) . For six step operation of inverter the current and flux are :

$$\begin{cases} I_{1\max} = \frac{4\sqrt{3}}{\pi\,\tau'} i_d \\ \underline{\phi}_{s\approx} = \phi_{s\max}\, e^{j\omega t} \\ \underline{i}_{s\approx} = I_{1\max}\, e^{j\omega_1 t} \end{cases} \quad (13)$$

For first sub period will result the following :

$$\begin{cases} \frac{\underline{i}_{sII}}{I_{1\max}} = j\frac{\pi}{6}\tau' \\ \frac{\underline{\phi}_{sI}(\tau)}{\underline{\phi}_{s\max}} = \frac{I_{sI}\omega_1 T_r}{I_{1\max}\tau'}\left(\tau+\frac{1+e^{\frac{1}{\omega T_r}(\frac{\pi}{3}-\tau')}}{1+e}e^{\frac{1}{\omega T_r}}+\tau'-1\right) \end{cases}, \quad (14)$$

and for the second subperiod :

$$\begin{cases} \frac{\underline{i}_{sII}}{I_{s\max}} = e^{j\omega\tau} \\ \frac{\underline{\phi}_{sII}}{\underline{\phi}_{s\max}} = \frac{\underline{i}_{sII}}{I_{s\max}}\left(1-e^{\frac{\tau}{\omega T_r}}\right)+\left(\tau'+\frac{1+e^{\frac{1}{\omega T_r}(\frac{\pi}{3}-\tau')}}{1+e^{\frac{1}{\omega T_r}}}e^{\frac{\tau'}{\omega T_r}}+\tau'-1\right)e^{\frac{\tau}{\omega T_r}} \end{cases} \quad (15)$$

Now we can write torque pulsations per average torque for a given speed as :

$$\frac{M}{M_{med}} = \mathrm{Re}\left[\frac{\underline{\phi}_s}{\underline{\phi}_{s\max}}\frac{\underline{i}_s}{I_{s\max}}\right] \quad (16)$$

with the average torque computed by :

$$M_{med} = \frac{P}{\omega} \quad (17)$$

3. SIMULATIONS RESULTS .

Simulations were carried out using VisualSim for a 250 W IM with the following shape of curves presented in fig.3. By considering ramp grows of currents the pulsation of torque is diminished and the effect of switching is a plus in comparison with square wave primary currents .

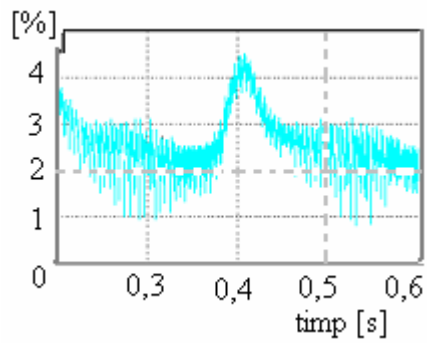

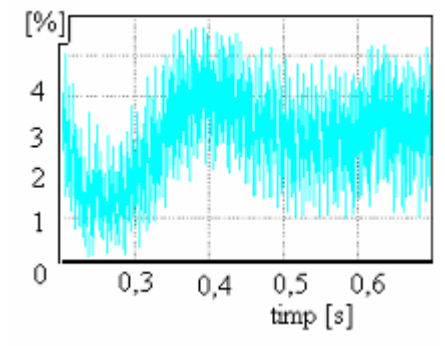

Fig.3 Torque pulsations .

By neglecting the ramp of currents τ′=0 and relations (14) are becoming :

$$\begin{cases} \dfrac{\underline{i}_{sII}}{I_{s\max}} = \lim\limits_{\tau^{|}\to 0} \dfrac{j\dfrac{\pi}{3}\dfrac{\tau^{|}}{2}}{\dfrac{\tau^{|}}{2}} = j\dfrac{\pi}{3}. \\ \dfrac{\underline{\phi}_s(\tau)}{\phi_{s\max}} = \dfrac{\underline{i}_s}{I_{s\max}}\left(1 + \dfrac{1}{1+e^{=\frac{1}{\omega_1 T_r}\frac{\pi}{3}}} e^{=\frac{\tau}{\omega_1 T_r}}\right) \end{cases} \quad . \qquad (18)$$

4. CONCLUSIONS

The use of spiral vector to describe the behavior of induction motors is not new , the same problem was considered in [5] but for a static three-phase contactor used to start a medium power IM . This study provides the analytical solution in case of considering
ramp grows of primary currents for six-step function of no modulated three-phase inverters .

References

[1] Sakae Yamamura *Spiral vector theory of AC circuits and machines . Editor Marcel Decker 1992.*

[2] Aurel Câmpeanu . *Electrical Machines . Fundamental Problems . Editura Scrisul Românesc Craiova1989 .*

[3] Nicusor Totor *Small power AC motor control load independent , Proceedings. of 3 rd International PhD Conference aug. 2001 Miskolc Hungary .*

[4] Ion Boldea *Vectorial control of electrical machines . Curs intensive . Lithography* Institutului Polytechnic " Traian Vuia " Timişoara 1987 ,

[5] Valery Chrishanov - *A new method for starting IMs* . ICEM 2002 .